SUBSYSTEMS FOR DATA ACQUISITION – #39

Analog-to-Digital Converter (ADC) Function Card

ADC Function Card
Project Scope

- **Design an ADC function card for an IEEE 488 interface box built by Dr. Robert Kolbas.**
- **ADC card will add capability to the current interface box.**
- **ADC card, in conjunction with the IEEE 488 interface box, will be used to communicate to a computer-based spectrum analyzer.**

ADC Function Card Product Appearance

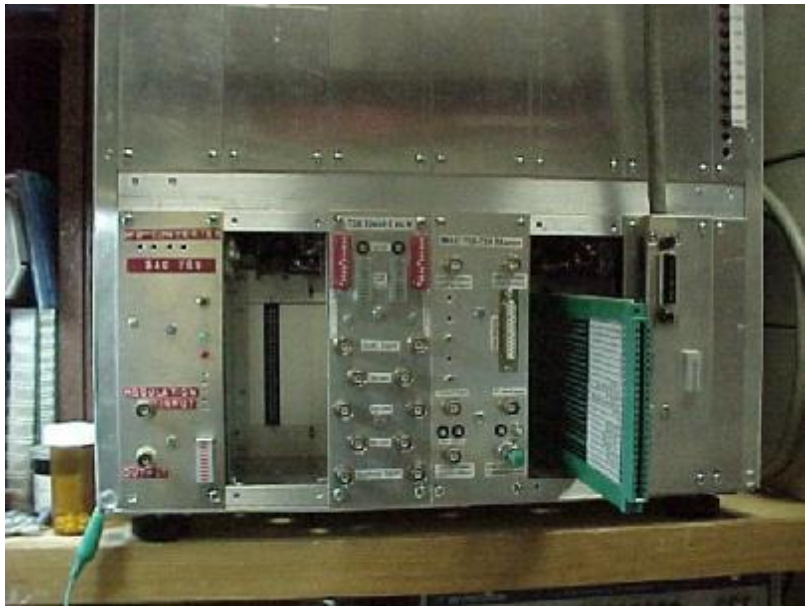

ADC Function Card Project Requirements

- **Communicate with the computer via the IEEE 488 communication protocol.**
- **Accept IEEE 488 commands from the computer to set the sampling rate and transmit sampled data**
- **Acquire a predefined number of 16-bit samples (8192).**
- **Accept analog input signals to sample in the range from 10 Hz to 25 kHz and to sample with a voltage range of +/- 10V.**
- **Sample the input signal with 16 bits of precision (15 bits + sign bit) and output the sampled data over the IEEE 488 interface to the computer, byte-by-byte.**

ADC Function Card
Project Requirements – Cont.

- **Be implemented using the wire-wrap technique.**
- **All integrated circuits on the ADC card will be mounted in sockets.**
- **Operate on the +15/-15 V and +5 V power supplied by the internal cabinet bus.**
- **Be reproducible for less than $250.**
- **Have a connector to which the analog input signal may be supplied**
- **Have an LED status indicator (ready/currently sampling/data acquired).**

ADC Function Card
Design Alternatives – Summary

Multiple LP Time-Continuous Filters		**Adjustable Switched-Capacitor LP Filter**
Butterworth	**Bessel**	**Chebyshev**
ADC Chip		**Custom Circuitry**
x16 RAM		**x8 RAM**
Pure Hardware		**Microcontroller**
PIC	**M16C**	**AVR**
Assembly		**C**
PCB		**Wire-Wrap**
Sockets		**Soldering**
IEEE488 w/software		**IEEE488 Circuitry**

ADC Function Card Design Alternatives

- Lowpass Filter (s): Multiple Time-Continuous vs. Adjustable Switched-Capacitor
  - Switched-capacitor filter can produce an artificial signal
  - "Multiple" in our case is only 2
- Butterworth vs. Bessel vs. Chebyshev
  - Butterworth gives best performance for simplest circuit
  - Chebyshev has too much ripple in passband
  - Bessel stopband attenuation is too low
  - Sponsor does not expect much high-frequency noise
    - (hi-freq noise would be a problem for Butterworth)
- ADC Chip vs. Custom Circuitry
  - Variety
  - Why reinvent the wheel?
  - Reliability
  - Easier to debug

ADC Function Card Design Alternatives

- **RAM width: x16 vs. x8**
  - **x16 chips aren't free**
  - **IEEE488 bus only supports byte-at-a-time**
  - **ADC chip can output bytes separately**

- **Hardware vs. Microcontroller**
  - **Easier to debug**
  - **Familiarity with microcontrollers**
  - **Timing implementation**

- **PIC vs. M16C vs. AVR**
  - **M16C is 16 bit – too much power**
  - **Already have PIC development environment**
  - **Sponsor has experience with PICs**

ADC Function Card Design Alternatives

- **Assembly vs. C**
  - C first for ease of programming
  - Finer points/debugging in Assembly
- **PCB vs. Wire-Wrap**
  - PCB is difficult to rework
  - Research (not commercial) product
  - Easier for sponsor to modify
- **Sockets vs. Soldering**
  - May need to replace chips
  - Microcontroller will be replaced often (for reprogramming)
- **IEEE488: Software vs. Circuitry**
  - Handshaking = tedium
  - Consistency
  - Circuitry already designed and implemented

ADC Function Card
Sampling Rate Alternatives

#1 – Fixed sampling rate (100 kHz) w/ 8K (8192) data points

Pros: easy; bus can handle data; good resolution (samples/period)

Cons: at low frequency input signals, very few periods obtained

<u>100 kHz sampling rate and 8K data points</u>

@ 25 kHz input signal
4 samples per period (unavoidable, but not a big deal)
2048 periods captured

@ 1 kHz input signal
100 samples per period
~82 periods captured

@ 10 Hz input signal
10000 samples per period
0.8 periods captured

ADC Function Card
Sampling Rate Alternatives

High sampling rate + fixed number of data points + low frequency input signal = bad stuff (incomplete sample)

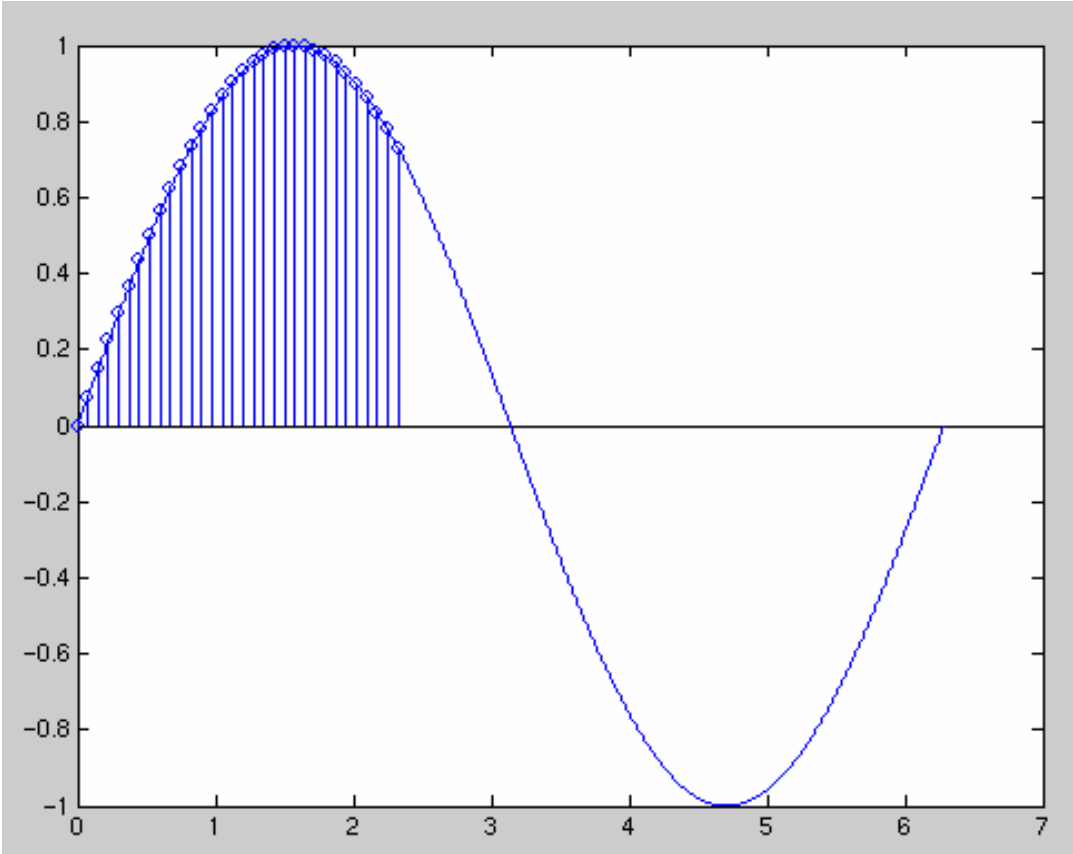

ADC Function Card
Sampling Rate Alternatives

#2 – Fixed sampling rate (100 kHz) w/ 32K (32768) data points

Pros: good resolution; captures 3 periods of 10 Hz signal; easy

Cons: bus can't handle so much data

#3 – Fully-adjustable sampling rate w/ 8K data points

Pros: user can adjust sampling rate according to needs

Cons: tricky, need switch-capacitor filter (artificial signal)

ADC Function Card
Sampling Rate Alternatives

#4 – Two sampling rates (100 kHz & 10 kHz) w/ 8K data points

Pros: easy to implement (need only two LP filters), two choices of resolution, captures enough periods

<u>100 kHz sampling rate and 8K data points:</u>

@ 25 kHz input signal
- **4 samples per period**
- **2048 periods captured**

@ 1 kHz input signal
- **100 samples per period**
- **~82 periods captured**

@ 122 Hz input signal
- **~820 samples per period**
- **10 periods captured**

ADC Function Card
Sampling Rate Alternatives

<u>10 kHz sampling rate and 8K data points</u>

@ 122 Hz input signal

~82 samples per period

100 periods captured

@ 10 Hz input signal

1000 samples per period

~8 periods captured

ADC Function Card
Sampling Rate Alternatives

of Periods Captured vs. Input Frequency

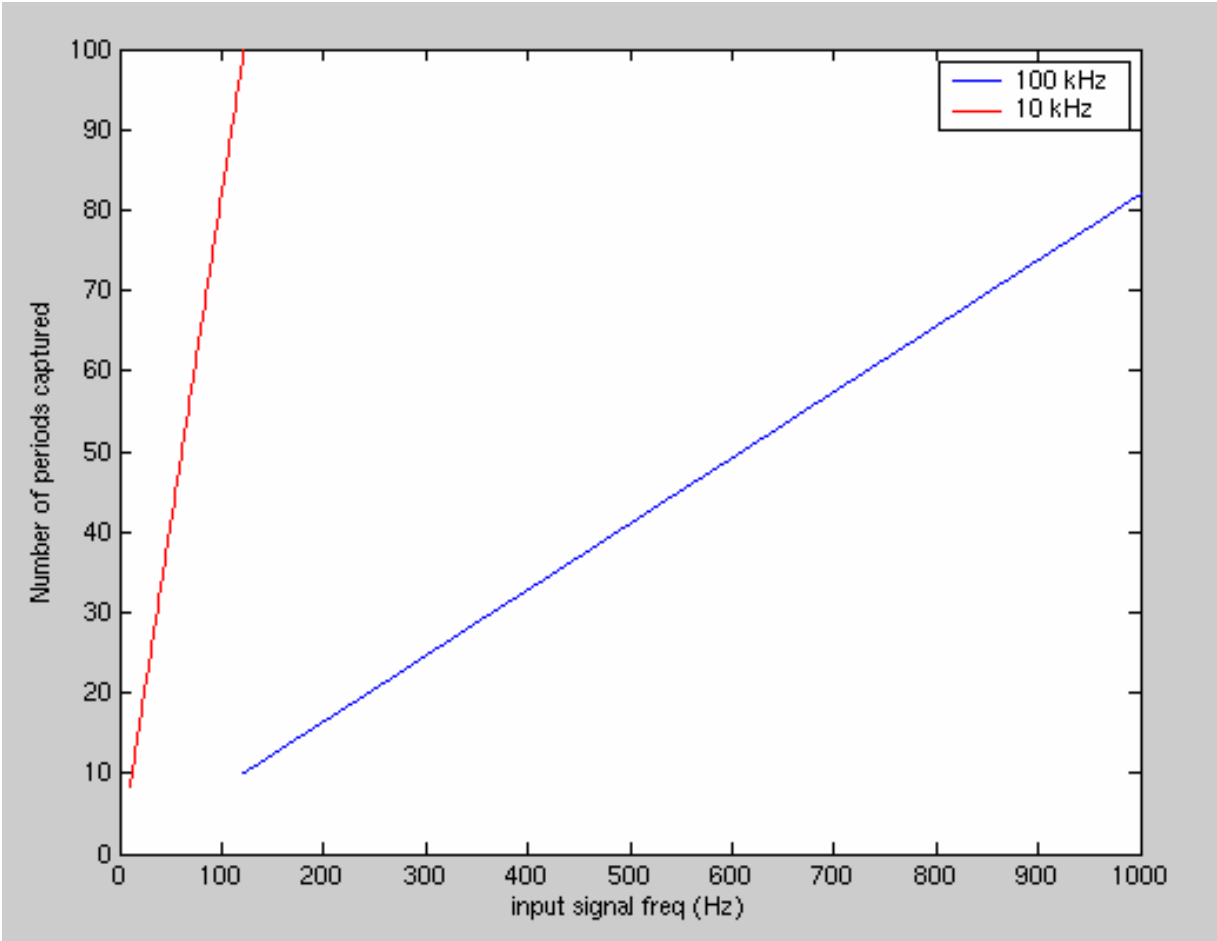

ADC Function Card
Sampling Rate Alternatives

Sampling Resolution vs. Input Frequency

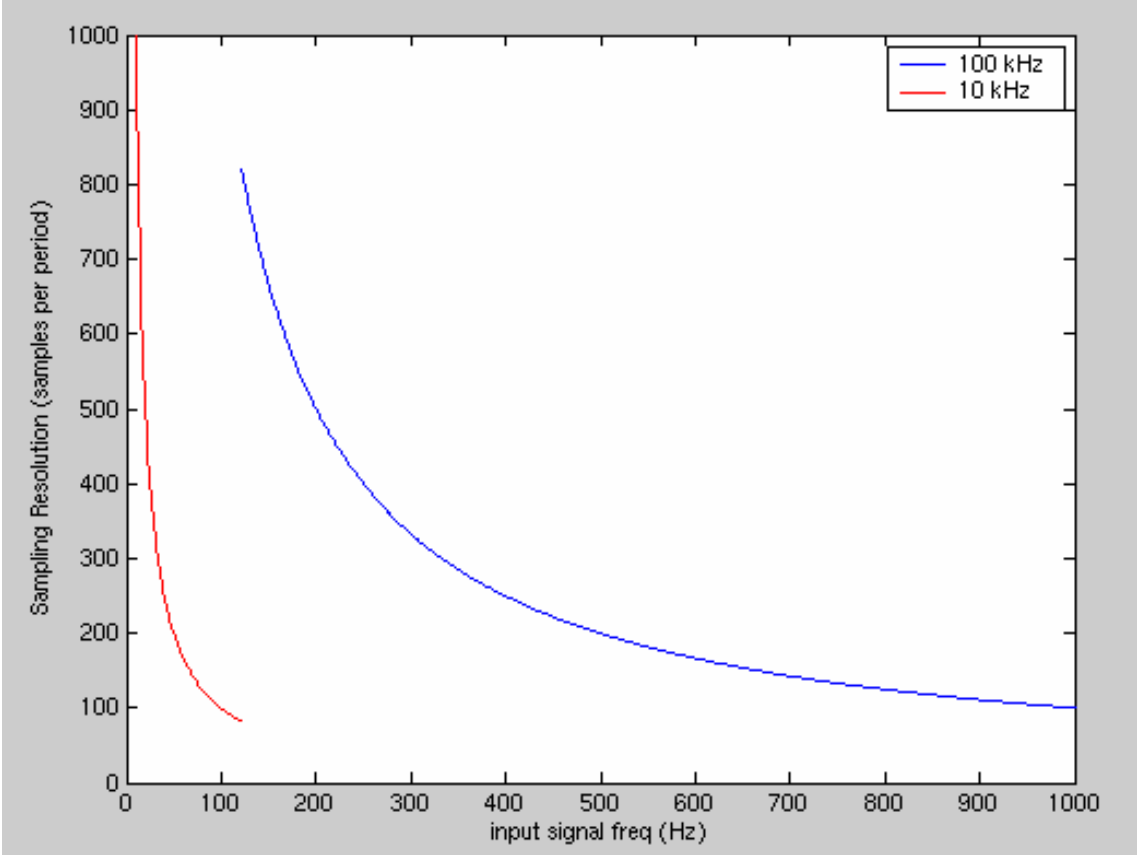

ADC Function Card Design Enhancement

- **Much 60 Hz noise in the IEEE 488 box**
- **Sponsor would like to distinguish 60 Hz + harmonics on spectrum**
- **Computer performs DFT:**

$$\Delta f = \frac{f_s}{M}$$

- **Δf = frequency spacing, f_s = sampling rate, M = # of samples**
- **100 kHz sampling rate, 8192 samples: Δf = 12.2 Hz**
- **10 kHz sampling rate, 8192 samples: Δf = 1.22 Hz**
- **Sufficient frequency resolution to distinguish 60 Hz harmonics on the spectrum**

ADC Function Card Cost Estimate

	Qty	Price	Total
Low Pass Filter	3	12.58	37.74
Op-Amp	2	5.45	10.90
Op-Amp	2	1.90	3.80
Analog-to-Digital Converter	1	34.35	34.35
Memory Chip	2	7.50	15.00
Microcontroller	2	5.61	11.22
PUM	1	30.00	30.00
Estimated Cost			**143.01**
To-date Cost			**30.00**

ADC Function Card Block Diagram

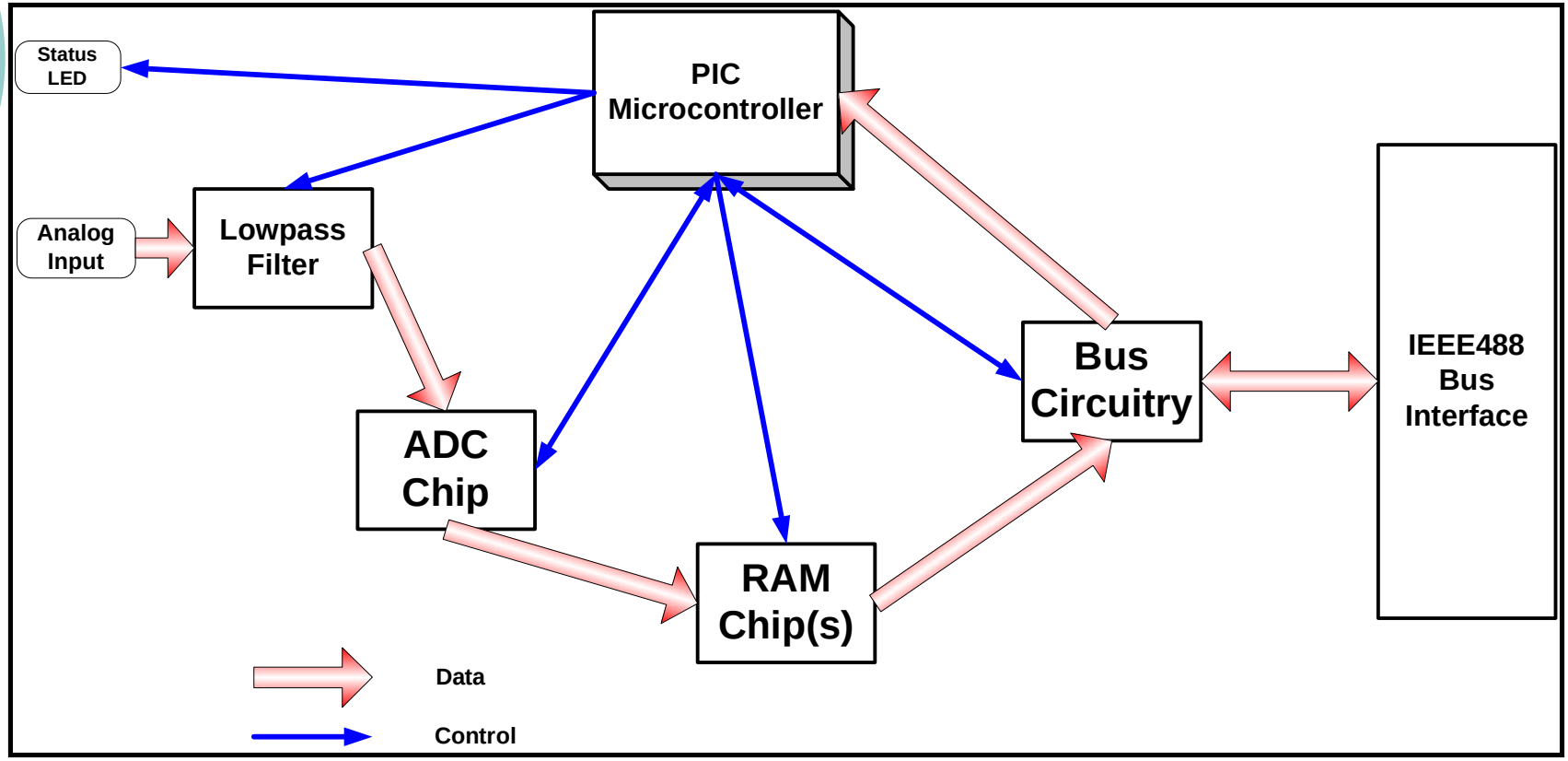

ADC Function Card Schematic – Version 1

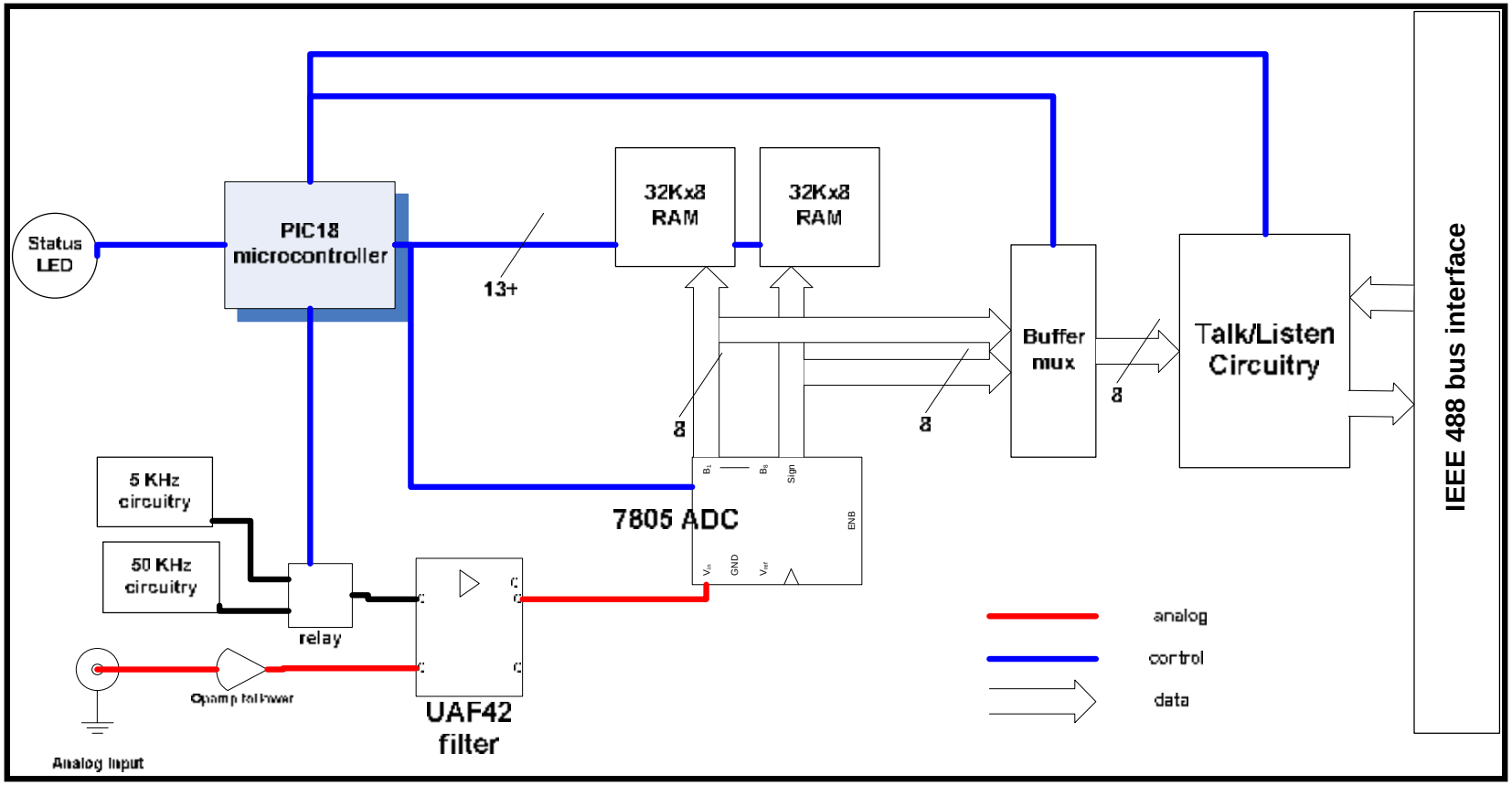

ADC Function Card Schematic – Version 2

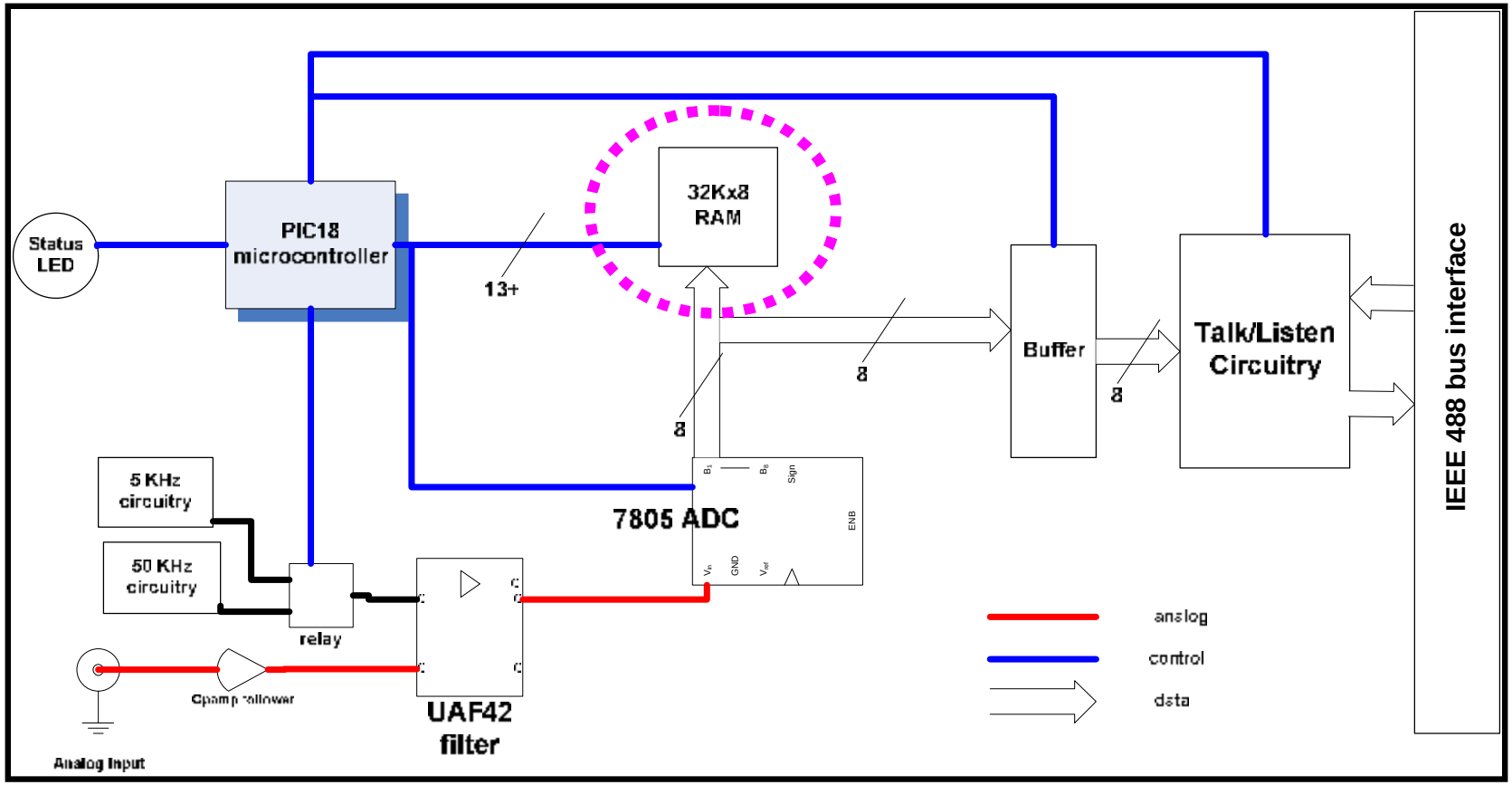

ADC Function Card
PIC State Diagram

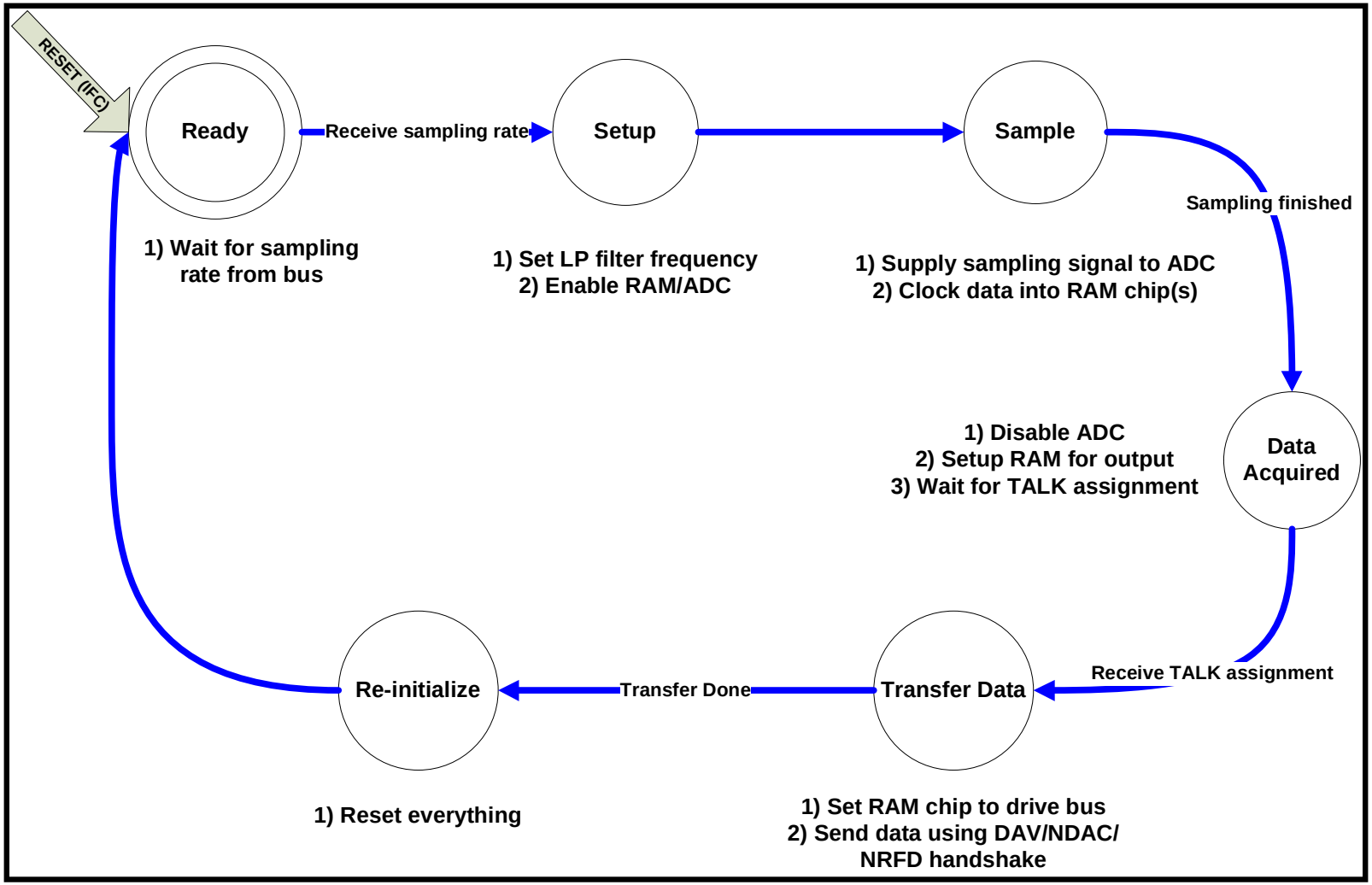

ADC Function Card Questions/Comments?